SKF

Sealing arrangement design guide

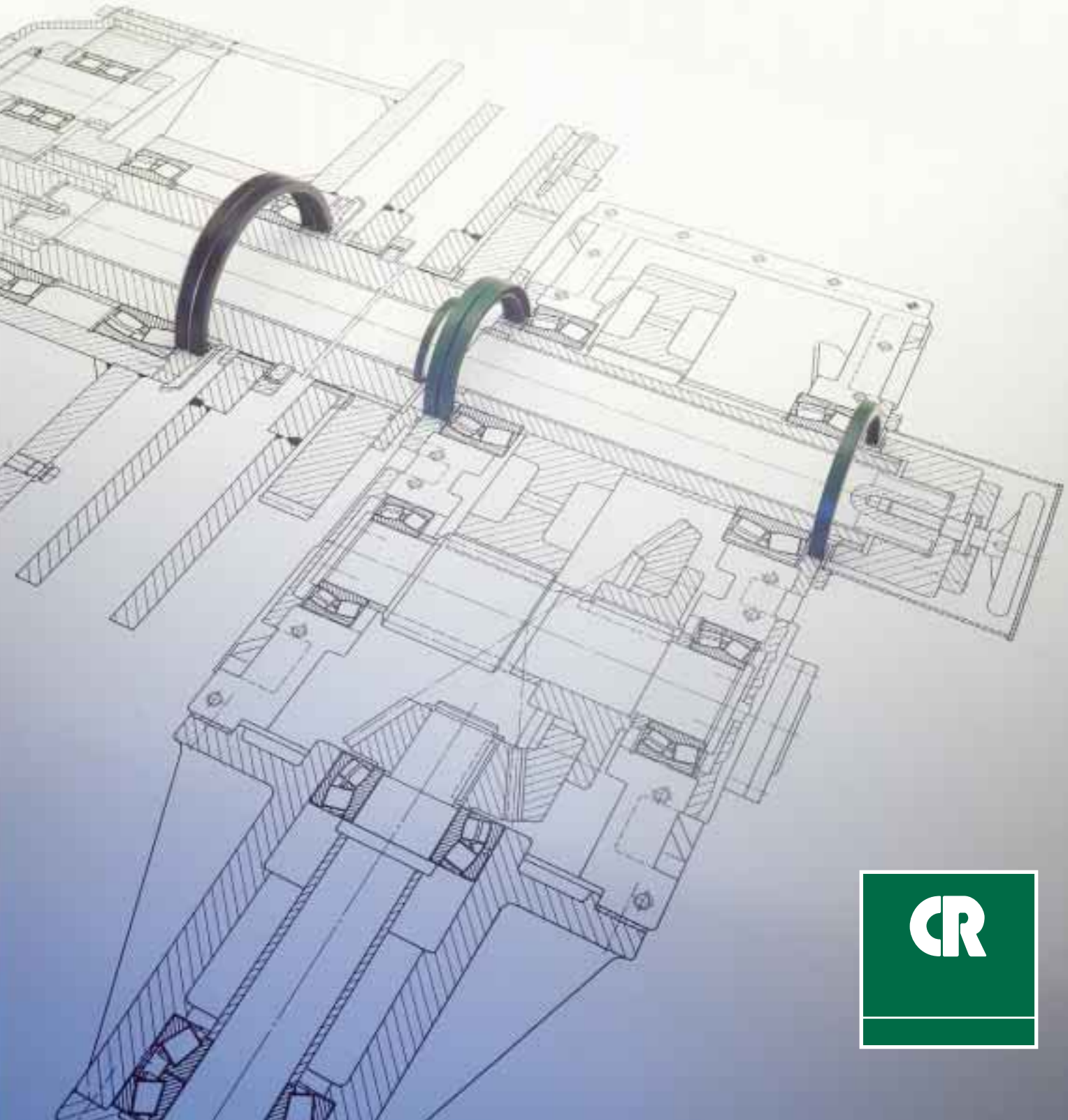

CR

Contents

The complete SKF bearing and CR sealing system 3

Bearing damage – a sign of sealing problems 4

The seal 6
Function 6
Types 6
Radial shaft seals 8
Materials 9
The environment 11
The shaft 14
The housing bore 15

Seal selection 16
Grease retention 18
Oil retention 18
Exclusion 19
Exclusion/retention 19
Separating two liquids 20
Containing high pressure 20
Restricted space 21
Installation restrictions 21

Seal installation 22

Repairing worn shafts 24

Seal maintenance 26

Seal check list 27

A brief history of CR Industries 29

The SKF Group – a worldwide corporation 30

The complete SKF bearing and CR sealing system

Since taking over CR (Chicago Rawhide) in 1990, SKF is not only the world leader in rolling bearings but also in shaft sealing technology. Combining the very wide experience of SKF with rolling bearing applications throughout the world and the know-how of CR in respect of seals has strengthened SKF competence in these fields. It also forms a solid foundation for further innovations in bearing and seal technology.

Whatever the bearing arrangement, it comprises not only the bearing but also the components immediately associated with the bearing. Besides shafts and housings these include the seals, the performance of which is of vital importance to the cleanliness of the lubricant. Contaminants have a profound effect on bearing life and the SKF New Life Theory allows this to be quantified.

For the designer this means that bearings and seals should be viewed as an integrated system and should be treated as such. When designing the sealing arrangement and selecting the seals, therefore, the requisite life of the bearing(s) and the lubricant must be taken into consideration.

For the maintenance engineer, it means that seal wear and bearing failure are not inevitable and can be avoided by using a different seal or a seal of different material, or by changing maintenance routines etc.

For SKF, it means that increasing attention is being paid to seals for bearings as well as to seals in general. It also explains why CR, the largest American producer of radial shaft seals, now forms part of the SKF Group.

CR has always devoted considerable resources to research and development of new designs, materials and manufacturing of seals. These efforts are now concentrated at a research centre in Elgin, Illinois, USA, which is probably the largest research facility of its kind in the world. The ongoing development of sealing technology brings benefits to the original equipment manufacturer as well as to the end user. Design and material improvements enhance the contaminant exclusion and lubricant retention properties of the seals – so essential to long seal life, long bearing life, and last but not least, long machine life.

SKF bearings and CR seals complement each other and are always the correct choice for bearing and sealing arrangements of all kinds.



Bearing damage – a sign of sealing problems

The calculated life of a bearing is defined as the period of time for which the bearing will operate until signs of fatigue set in, and since most bearings fail for other reasons, it may be argued that most bearing failures are premature.

The development of the SKF New Life Theory has made it possible to take into account not only the effects of material and lubricating conditions on bearing life in addition to bearing load, but also the effect of contamination and the bearing damage it produces. Solid contaminants, depending on particle size, hardness and brittleness will produce indentations and/or wear on the bearing surfaces. Water will affect the efficiency of the lubricant and also its rust inhibiting properties. Contamination in the lubricant can dramatically reduce bearing life so that good sealing is of vital importance.

When a seal fails, contamination can infiltrate the bearing area and enter the lubricant and then the bearing. Also, lubricant may be lost from the bearing, leading ultimately to dry running and bearing failure. Information regarding the influence of lubrication and contamination on bearing life can be found in the SKF General Catalogue.

Bearings can, of course, fail for reasons other than seal or lubricant breakdown. These reasons include overloading, either as a result of applying too heavy a load or as a result of misalignment or faulty mounting. Other reasons are overheating, excessive vibration or the passage of electric current through the bearing.

More information about bearing damage will be found in publication PI 401 ”Bearing failures and their causes”.

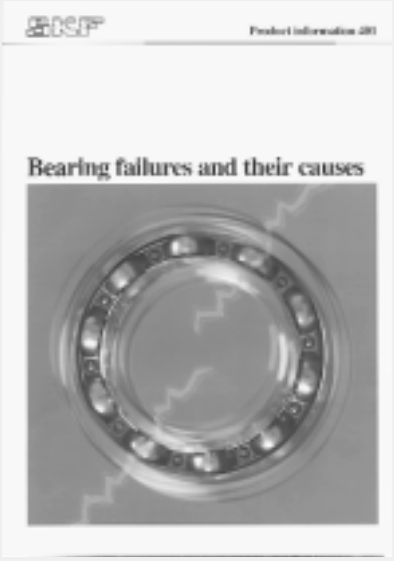

Bearing damage that may be seal related



Wear caused by abrasive particles
Pitting (small indentations) and/or wear of the surfaces of the raceways on rings and rolling elements and a darkening of the lubricant indicate the presence of contamination.



Wear caused by inadequate lubrication
Worn or mirror-like surfaces, possibly with coloured (brownish) bands, indicate poor lubrication.



Corrosion
Greyish-black streaks across the raceways at intervals corresponding to the spacing of the rolling elements (in this case cylindrical rollers) indicate that water has penetrated the bearing during standstill. General rust indicates the presence of water or other corrosive substances.



Indentations caused by contaminant particles
Indentations on the raceways of rings and rolling elements indicate the presence of contaminants in the bearing. Even soft particles such as cellulose or textile fibres can cause indentations if they are large enough.



Surface distress
Small shallow craters with crystalline appearance can result from momentary brief metal-to-metal contact. The cause may be either the use of an unsuitable lubricant, or the loss of lubricant through the seal.



Smeared roller ends and guide flanges
Scored and discoloured roller ends or flange surfaces are caused by inadequate lubrication of the roller end/flange contact. In some cases this may be because lubricant has been lost.

The seal

Function

The purpose of a seal is to prevent the passage of media of all types between the mating surfaces of components; the surfaces may be either stationary or in motion. The seal should be sufficiently capable of deformation to be able to compensate for any surface irregularities but also be strong enough to withstand operating pressures. The material(s) from which the seal is made should also be able to withstand the operating temperatures, and have appropriate chemical resistance.

Types

There are several different types of seal; for example, DIN 3750 distinguishes between the following basic types:

1. seals in contact with stationary surfaces,
2. seals in contact with sliding surfaces,
3. non-contacting seals,
4. bellows and membranes.

Seals in contact with stationary surfaces are known as static seals and their sealing effect depends on the radial or axial deformation of their cross section when installed. Gaskets (➔ **fig 1**) and O-rings (➔ **fig 2**) are typical examples of static seals.

Seals in contact with sliding surfaces are used to seal the passage between machine components which move relative to each other either linearly or in the circumferential direction. These seals, known as dynamic seals, have to retain lubricant, exclude contaminants, separate different media and withstand differential pressures.

There are various types of dynamic seal, including packings and piston

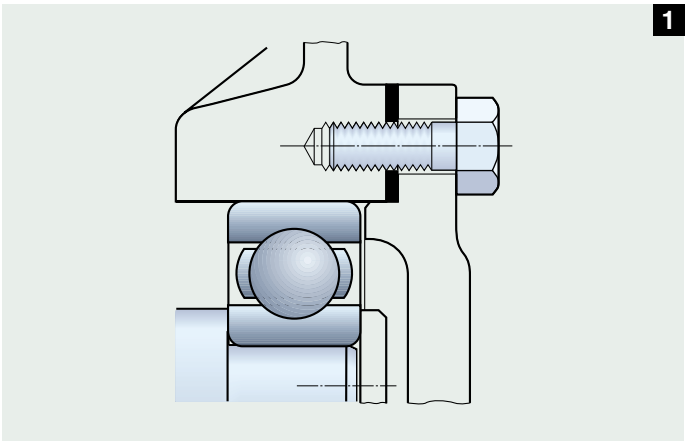

1 ***Static seal: gasket***

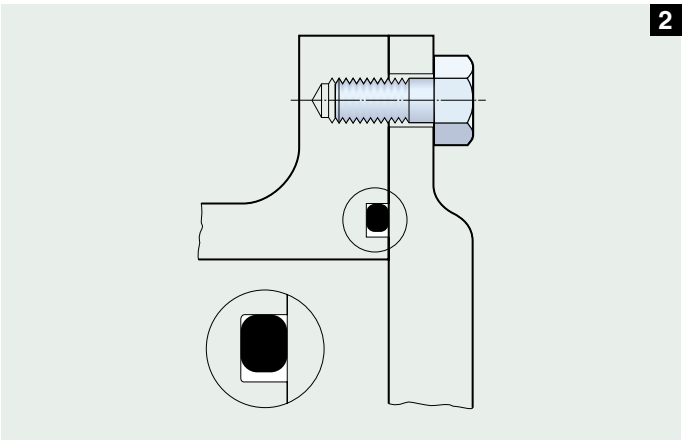

2 ***Static seal: O-ring***

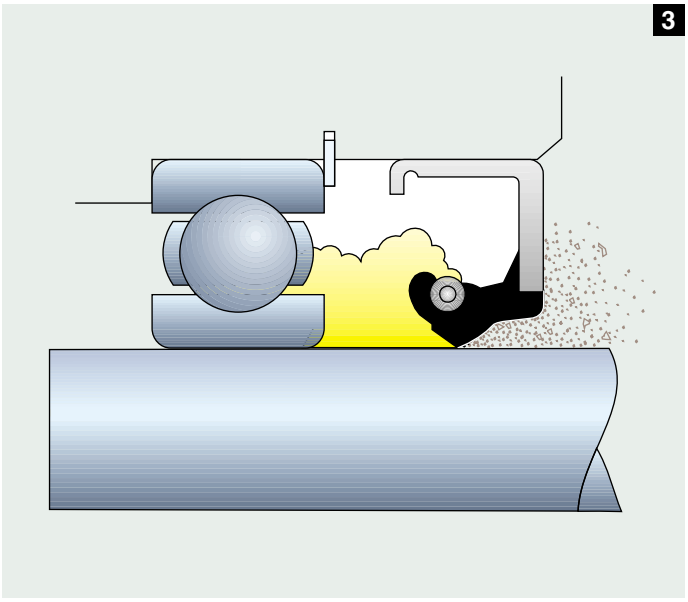

3 ***Dynamic seal: radial shaft seal***

rings, which are used for linear or oscillating movement. However, radial shaft seals (➔ **fig 3**) constitute the major type and are used in widely differing applications in all branches of industry. Other popular dynamic seal types include mechanical seals (➔ **fig 4**), V-ring seals (➔ **fig 5**) and felt seals.

The non-contacting or non-rubbing seals function by virtue of the sealing effect of a narrow, relatively long gap which may be arranged axially, radially or as a combination of radial and axial gaps. Non-rubbing seals, which range from simple gap-type seals to multi-stage labyrinths (➔ **fig 6**) are practically without friction and do not wear. They are, therefore, particularly suitable for high-speed and high-temperature operation.

Bellows and membranes are used to seal components which have limited movement relative to each other.

Because of the importance of radial shaft seals for the efficient sealing of bearing arrangements, this guide deals almost exclusively with radial shaft seals and their application as well as with the various designs and executions.

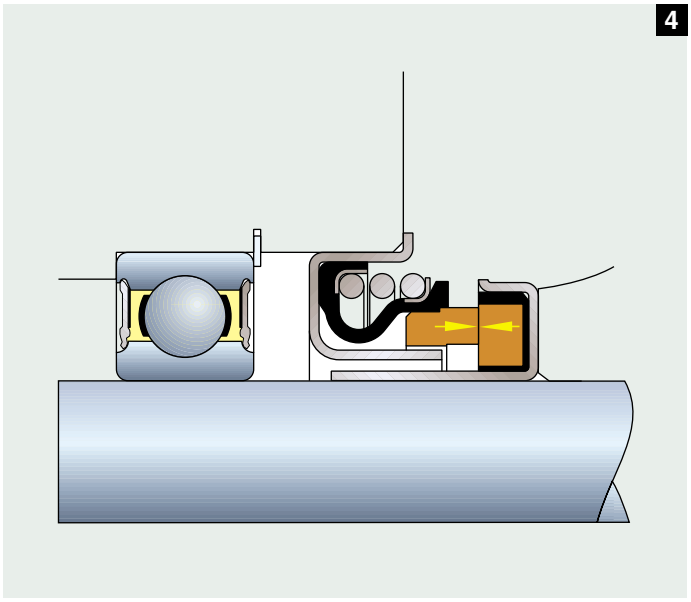

4 ***Dynamic seal: mechanical seal***

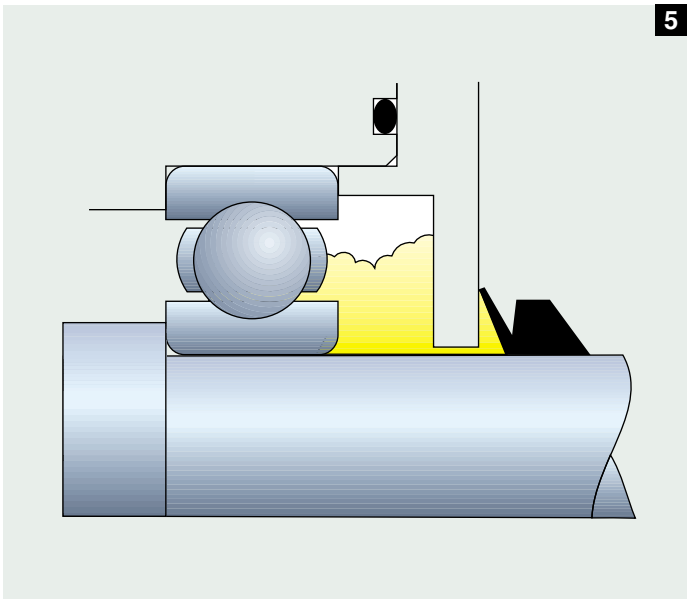

5 ***Dynamic seal: V-ring seal***

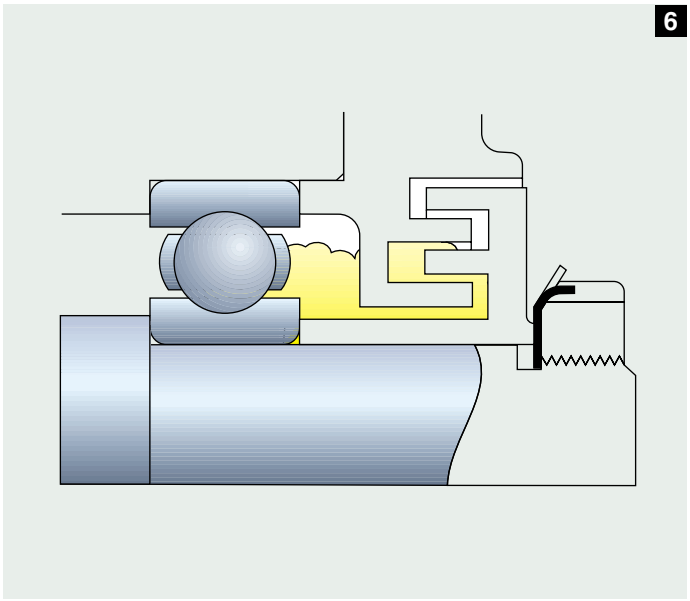

6 ***Dynamic seal: labyrinth seal***

Radial shaft seals

Radial shaft seals consist of

– a cylindrical outside diameter of pressed steel (shell) or elastomer which provides a static seal in the housing bore, gives a sufficiently tight fit for the seal in the bore, and enables the seal to be properly installed;
– a sealing lip of elastomer, which seals against the shaft; the sealing lip has an edge formed by pressing, cutting or grinding, which is normally held against the surface of the shaft (counterface), with a defined radial force, by a garter spring.

The principal components of a typical radial shaft seal are shown in the adjacent illustration (➔ **fig 7**). The seal shown has a simple L-shaped steel shell to which the sealing element of elastomer is bonded. An additional secondary or dust lip may also be provided. This protects the primary sealing lip from solid contaminants.

Seals with inner shells have enhanced radial stiffness. The inner shell is advantageous where installation conditions are difficult.

CR produces radial shaft seals of all the standard types covered by ISO 6914/I (DIN 3760 and DIN 3671) (➔ **fig 8**). The CR radial shaft seal range also includes special designs, in particular for heavy engineering applications (➔ **fig 9**).

The sealing lips of CR radial shaft seals are produced in various materials and in two executions which differ in the form of the sealing lip edge. The “conventional” edge is straight and traces a relatively narrow path on the counterface. CR Waveseals on the other hand have a hydrodynamically formed edge which traces a sinusoidal path on the counterface. The Waveseal represents the most important development in radial shaft seals over the past 25 years. The axial relative movement of the form-pressed Waveseal lip on the counterface provides hydrodynamic properties, pumping lubricant back into the bearing arrangement and deflecting contaminants.

The garter springs of standard CR radial shaft seals, which press the sealing lip against the counterface with the

7

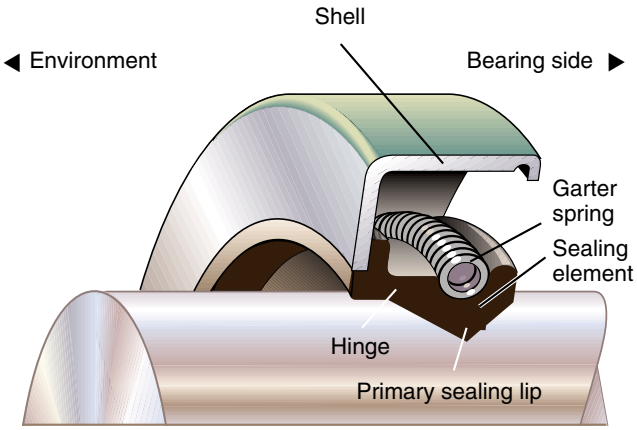

Typical radial shaft seal

8

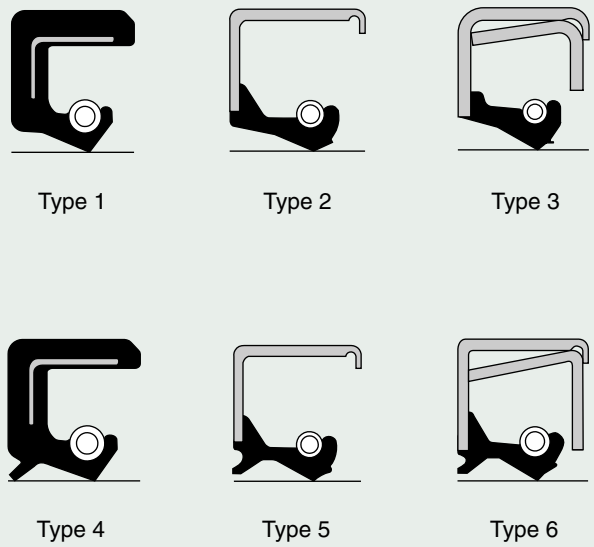

Radial shaft seals to ISO 6194

9

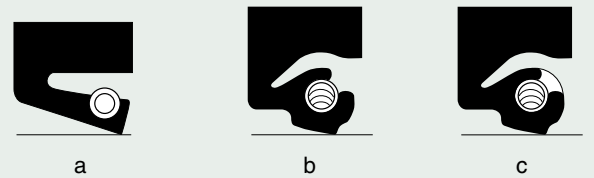

All-rubber radial shaft seal
a) with open spring groove
b) with Spring-Lock
c) with Spring-Kover

necessary radial force, are located in grooves. These grooves enclose some 180° of the spring (➔ **fig 9a**). The large seals of the HDS and HS designs are an exception. They have a Spring-Lock, one “wall” of the groove being extended so that some 270° of the spring is enclosed (➔ **fig 9b**). Thus the spring is protected during difficult and dirty installation conditions and is prevented from leaving the groove. In cases where even greater protection is required for the garter spring, seals which have the Spring-Lock can also be supplied fitted with Spring-Kover (➔ **fig 9c**), a flexible cover of elastomer material, so that the spring is completely enclosed.

Materials

The performance and reliability of a radial shaft seal are largely dependent on the material from which the sealing lip is made. Where seals regularly fail after a short period of operation, it may be advisable to replace them with seals of another material, e.g. one which is more wear-resistant such as CR LongLife fluoro rubber. Although more expensive to buy, the reduced maintenance and downtime may make them an economic proposition.

Normally materials based on acrylonitrile butadiene are used for radial shaft seals. For CR seals, the materials described in the following are used.

Acrylonitrile butadiene (NBR)
Commonly referred to as nitrile rubber, this material has good resistance to most mineral oils and greases and can be used at temperatures of between –50 and +100 °C and for short periods up to +120 °C. These seals can also tolerate dry running of the lip for brief periods.

Variants of this material are available for use with fuels, industrial fluids and certain synthetic lubricants.

Duralip (X-NBR)
Duralip is a carboxylated nitrile rubber which combines the good properties of nitrile rubber with a very high wear resistance. The material is used for large seals and Duralip seals should

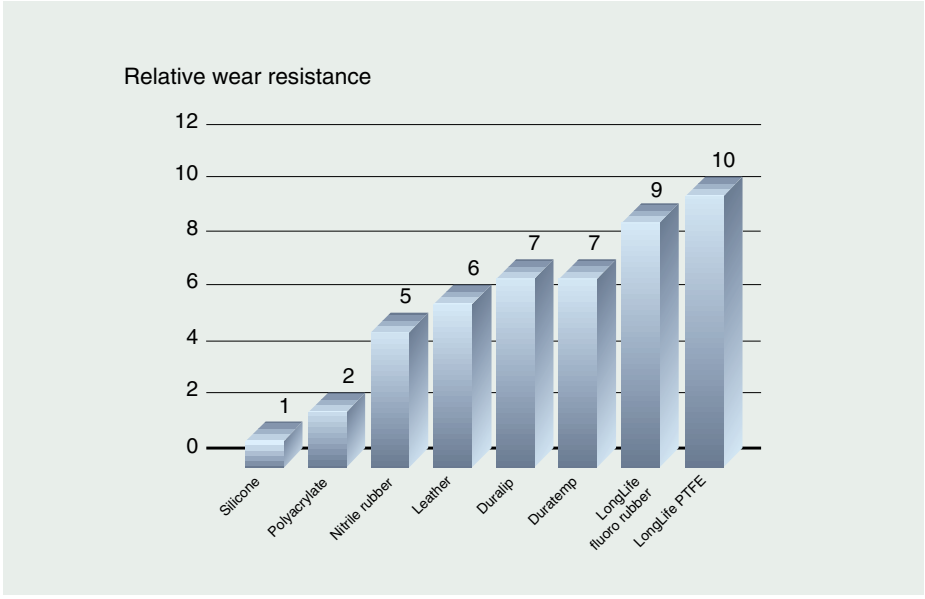

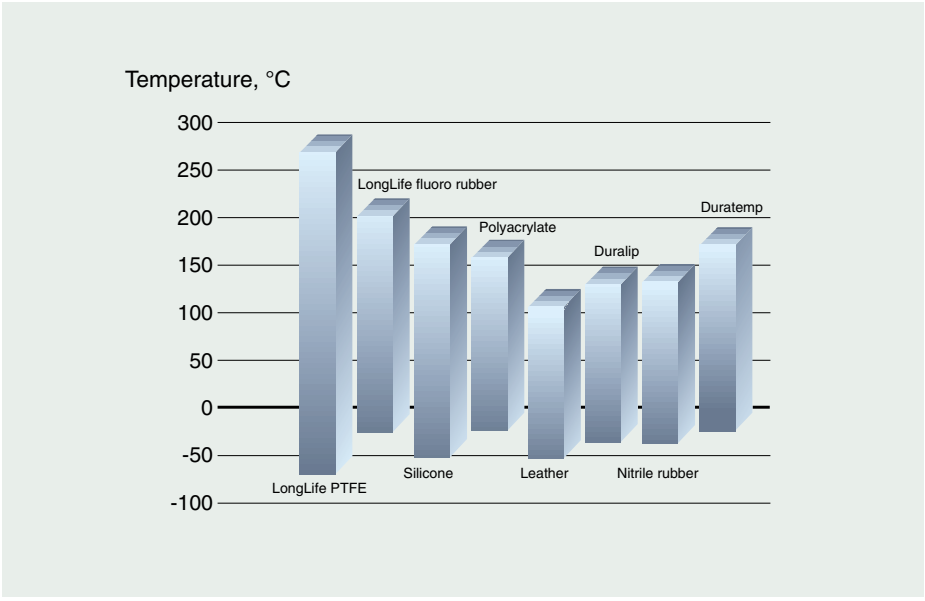

be used where abrasive material such as scale, sand and grit is likely to collect at the shaft seal area.

Duratemp (H-NBR)
This is a special hydrogenated nitrile rubber which offers improved tensile strength and resistance to wear, heat, hardening in hot oil, ozone and weathering. In some cases, aerated oils may be a problem. The operating temperature range is –30 to +150 °C.

Polyacrylate elastomer (ACM)
This material is more heat resistant than nitrile rubber or Duralip. It can be used at temperatures between –40 and +150 °C and, in the presence of some fluids, it can even withstand temperaures up to +175 °C. Seals of this material are resistant to oxidation and ozone and are well suited for use with many EP (extreme pressure) lubricants. They should not be used with water or aqueous solutions (acids, alkalis etc.) nor should the lips be allowed to run dry.

Silicone rubber (MVQ)
Silicone rubber seals can operate at temperatures ranging from –70 to +160 °C. The material absorbs lubricant, minimising friction and wear. However, compatibility with oxidised oils and some EP additives is poor. The lip should be protected against abrasive contaminants and should not be allowed to run dry.

LongLife fluoro rubber (FPM)
Fluoro rubber is highly resistant to heat and chemicals. Fluoro rubber seals can be used even under arduous environmental conditions at temperatures between –40 and +200 °C. The seals are also resistant to a wide range of chemicals including most of the fuels, hydraulic fluids and special lubricants which destroy nitrile rubbers, polyacrylate elastomers and silicone rubbers. The lip can withstand short periods of dry running.

Their drawback is that, if overheated, they will emit dangerous fumes, and even after they have cooled down again, they are dangerous to handle.

LongLife PTFE
Polytetrafluoroethylene (PTFE) has a chemical resistance which far exceeds that of all the materials described above and the material is mainly used for special seals. Dry running is permitted and the operating temperature range is –70 to +260 °C although care should be taken when using them above +200 °C so that they do not overheat. The risks are the same as those outlined under fluoro rubber.

Other materials used in seals
The shells and any metallic reinforcements are made of deep drawn carbon steel as standard. Free surfaces are treated for protection against corrosion. To special order they may be made of stainless steel although not for all cross sections and widths.

The garter springs are made of hard drawn carbon steel wire except those of the large HDS and HS seals which are made of stainless steel as standard.

Bore-Tite is a special CR non-hardening material used as a coating on some sizes of seal with steel outside diameter This green coating is resistant to most oils, greases, aqueous acids, alkalis, salts, alcohols and glycols. It is not compatible with aromatics, ketones or esters.

The environment

Even the best sealing mechanism between housing bore and seal outside diameter as well as between sealing lip and shaft counterface cannot guarantee optimum seal performance. Besides these geometric considerations, the entire surroundings must be taken into account. Therefore, the most important environmental and operating conditions will be briefly discussed.

Contamination
Contaminants such as water, dust or mud do more than just prevent optimum seal performance. If they enter the bearing area they can pollute the lubricant, cause corrosion, wear and premature bearing failure. To prevent bearing damage, heavy-duty seals with the sealing lip facing the contaminants are used. If the amount of contamination is minimal and the function of the primary seal is to provide fluid retention, then a V-ring or a seal with a secondary lip can be used for exclusion.

Pressure
Standard radial shaft seals perform best and last longest if the pressure on both sides of the seal is the same. The slightest amount of pressure increase on the inside of the seal will cause the sealing lip to be pressed against the counterface, thus widening the path it traces. Friction will increase in the contact and heat will be generated. The rise in temperature will cause the seal to wear rapidly. An extreme excess pressure in the housing can even force the seal out of the bore. Permissible speeds under pressure are given in the table below (➔ **Table 1**)

Seals used in hydraulic pumps and motors are exposed to a relatively constant pressure differential. In this type of application, special seals which are suitable for differential pressures should be used. These have shorter lips but they are more robust. The CR radial shaft seal for such conditions is the CRWA5 design. This heavy-duty seal incorporates a Waveseal lip and can accommodate pressures of 0,63 MPa at low circumferential speeds and 0,34 MPa at higher speeds.

Lubrication
For radial shaft seals to perform satisfactorily over a long period of time, it is essential that adequate lubrication is provided for the sealing lip. This prevents direct contact between the edge of the sealing lip and the counterface and reduces friction and therefore wear. Dry running of the sealing lip for any appreciable period of time must be avoided. For this reason, the counterface should be oiled or greased when the seal is installed to guarantee initial lubrication of the sealing lip. However, dry running can also occur, for example, when a machine is restarted after a long period of standing still, as it takes some time for lubricant to reach the sealing lip/counterface contact. In such cases, direct contact between the shaft and lip increases, causing heavy wear or ”stick-slip”. Leakage will result and the sealing lip will possibly be destroyed.

Where seals are not used to retain lubricant, grease or oil must be supplied separately to the sealing lip. In exceptional cases, and where there are two sealing lips or an additional secondary (dust) lip, an initial fill of grease in the free space between the two lips may be sufficient.

The use of CR LongLife materials (fluoroelastomers and PTFE) or other similar wear-resistant lip materials is recommended to compensate in part for inadequate lubrication.

Temperature
Both low and high temperatures affect seal performance. Typical rubber materials become hard and brittle at low temperatures. When the lip becomes stiff, it cannot prevent leakage nor contaminant penetration. The static sealing between the housing bore and the radial shaft seal may also be impaired, e.g. if the seal shell and housing bore are made of different materials which contract at different rates in the cold.

For low temperatures, therefore, a seal lip material having special low temperature properties should be considered, particularly if the seal is to be subjected to temperatures below –50 °C. To minimise the thermal contraction problems outlined above, it may be sensible to use a seal with an outside diameter of elastomer.

The use of seals with a rubber outside diameter is also recommended where temperatures are high and the housing is of a material which expands more rapidly than steel.

Friction, shaft speed, high fluid viscosity and heat transfer along the shaft all contribute to increased temperatures in the thin film of lubricant on which the sealing lip rides and can cause the lubricant film to break down. Lack of lubrication is one of the common causes of early seal failure.

If it is not possible to reduce the temperature in the lip/counterface contact zone, a new seal with different lip material should be used. CR premium seal lip materials, such as LongLife fluoro rubber, have relatively high thermal and wear resistance and usually last longer than nitrile rubber seals.

Table 1

Differential pressure max	**Shaft speeds** Rotational permissible	Circumferential max
MPa	r/min	m/s
0,02	3 000	5,6
0,035	2 000	3,2
0,05	1 000	2,8

Permissible speeds under pressure

Speed

The maximum circumferential speed at the sealing lip at which the seal will still perform efficiently is determined by several factors simultaneously. These include sealing lip material and design, shaft finish at the counterface, pressure, temperature, shaft eccentricity, lubrication and cooling of the sealing lip/counterface contact, and the presence of any chemicals. General guideline values for permissible speeds will be found in the table opposite (➔ **Table 2**). The values given are valid when a mineral oil provides good lubrication, cooling is adequate, and there is no pressure differential across the seal.

Retained fluid

The chemical resistance of the seal to the fluid which it is to seal is an important selection criterion. If the seal lip material is not compatible with the fluid to be retained, the seal will be unable to prevent leakage. Temperature is also important. As temperature increases, any chemical reaction will be accelerated and any aggressiveness will be heightened.

When the seal is to retain oil it should be remembered that as temperature increases, the viscosity of the lubricating oil decreases. Some lubricant additives may have detrimental effects on the seal materials.

Further information on the chemical resistance of the seal materials used by CR will be found in the SKF catalogue 4006 “CR seals” which will be sent on request.

Coaxiality and runout

The eccentricity of the shaft is one of the many factors influencing the performance and life of a seal. It is expressed as deviations from coaxiality and runout and should be kept as small as possible, particularly in cases where there is a pressure differential across the seal.

Coaxiality

Deviation from coaxiality is also referred to as shaft-to-bore misalignment (STBM) i.e. when the centrelines or

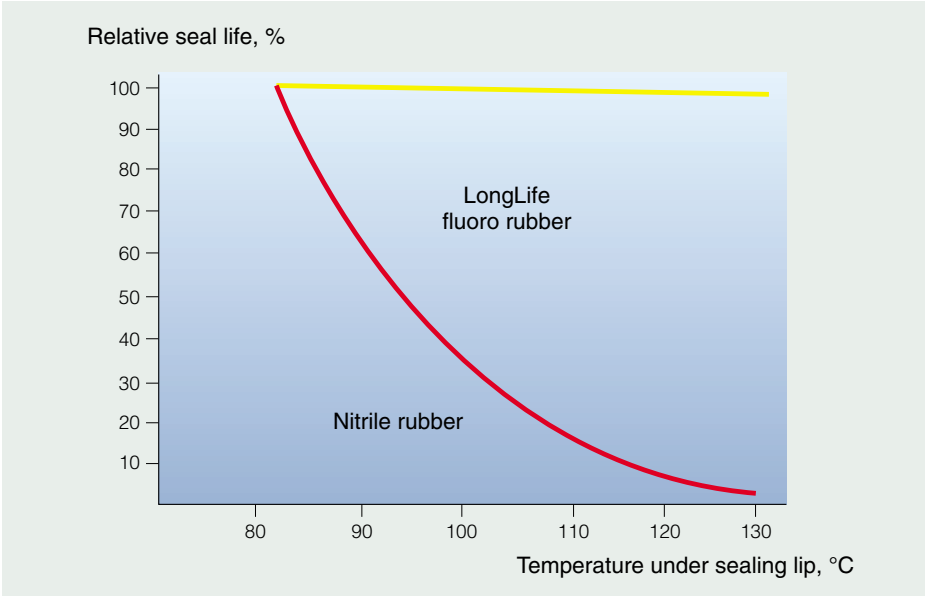

Temperature
Seal life as a function of temperature

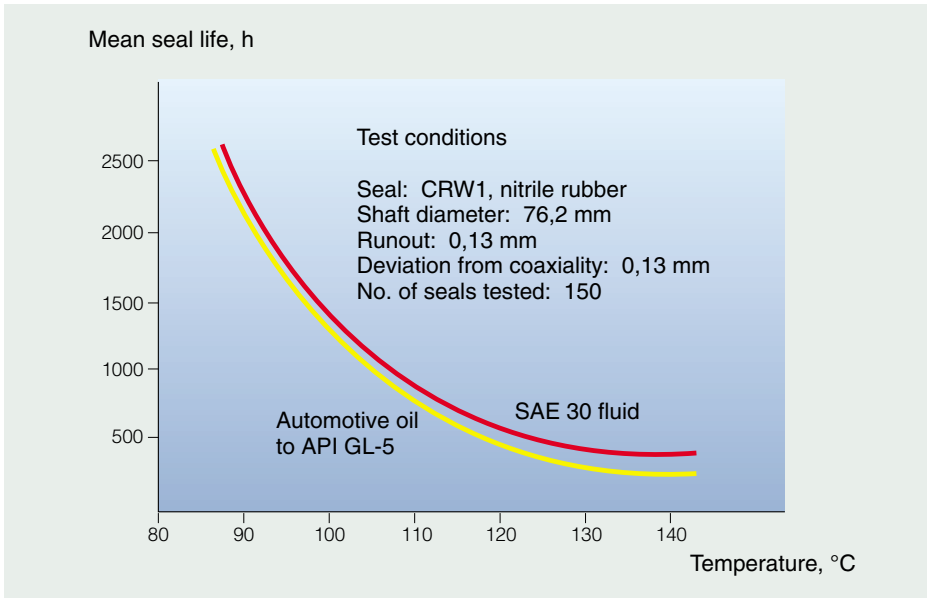

Lubricant
Seal life as a function of lubricant

axes of the shaft and housing bore do not coincide and causes an uneven force distribution around the sealing lip. One section of the lip will be more heavily stressed, leading to an enlargement of the contact of the lip with the counterface and thus to premature wear. The opposite section of the lip will be unloaded and its sealing efficiency reduced.

Runout

Runout (dynamic runout, DRO) is the dynamic eccentricity of the shaft, or the amount by which the shaft does not rotate about the true centre. Particularly at high speeds, there is a danger that the sealing lip, because of its inertia, will be unable to follow the shaft. If the distance between the sealing lip and the counterface on the shaft is greater than that required to maintain hydrodynamic lubrication, leakage will occur. It is therefore recommended that the seal be positioned as close to the bearing as possible and that bearing clearance should be as small as possible. Lip flexibility is important – the closer the lip is to the seal face, the smaller the runout which can be tolerated. Thus, by selecting a suitable seal design and lip material, larger runouts can be permitted.

Permissible circumferential speeds

Table 2

CR seals (Design)	**Circumferential speed** max
–	m/s
Radial shaft seals	
CRS, HMS	14
CRW, CRWA	18
HDS	25
HS	7,5 ... 12
Mechanical seals	
HDDF	2
V-ring seals	
Without extra location/support	7
With axial location	7 ... 12
With support ring	10 ... 20
Axial clamp seals	
CT	25

The shaft

To obtain reliable sealing and a sufficiently long service life, the counterface on the shaft for radial shaft seals should meet the following requirements.

Shaft material
The seals perform best on medium to high carbon steel which may be either through hardened or case hardened to a surface hardness of the counterface of 55 HRC or 600 HV, the case depth should be at least 3 mm. Lower hardness can be permitted, for example, when circumferential speeds are low, lubrication is good, or contamination absent. Ceramic coated and chromium or nickel-plated surfaces are also acceptable, provided they are finished to the recommended surface roughness. Brass, bronze and alloys of aluminium, zinc or magnesium are not recommended.

Surface finish
The contact area between the sealing lip and counterface is of vital importance to sealing efficiency. The surface roughness to ISO 4288 of the counterface should be kept within the following guideline values:

R_a 0,2 ... 0,8 µm
R_z 1 ... 4 µm
R_{max} 6,3 µm

The surface should not be smoother than the lower limits for R_a and R_z as otherwise lubricant supply to the contact may be impaired. The rise in temperature which would result from this, particularly at high circumferential speeds, would lead to hardening and cracking of the seal lip and to premature seal failure. If the surface is too rough, the seal lip will wear and seal life will again be foreshortened. If the value of R_{max} is exceeded, the seal may leak.

The surface should be machined so that there is no directionality, as otherwise there is a risk of leakage, depending on the direction of rotation. Plunge grinding is a suitable method of avoiding directionality.

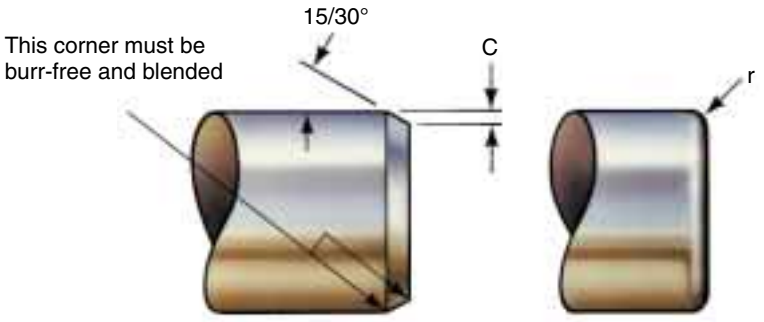

Shaft tolerances: counterface/ chamfer dimensions

Tolerances
The shaft diameter d_1 in the counterface area should be machined to tolerance h11. Deviations from circularity should be within IT8 (➔ **Table 3**).

Shaft ends
In order to be able to install the seal without damaging the sealing lip, shaft ends (as well as any shoulders) should have a lead-in or radius (➔ **Table 3**). The transitions should be burr-free and blended.

Table 3

Shaft diameter Nominal over	incl.	Shaft diameter deviations (Tolerance h11) high	low	Circularity (Tolerance IT8) max	Chamfer dimensions C min	r min
mm		µm		µm	mm	mm
	10	0	–90	22	0,75	1
10	**18**	0	–110	27	1	1
18	**30**	0	–130	33	1,25	1,5
30	**50**	0	–160	39	1,7	2
50	**80**	0	–190	46	2	2
80	**120**	0	–220	54	3,5	4
120	**180**	0	–250	63	3,5	4
180	**250**	0	–290	72	3,5	4
250	**315**	0	–320	81	5,5	6
315	**400**	0	–360	89	5,5	6
400	**500**	0	–400	97	5,5	6
500	**630**	0	–440	110	6,5	7
630	**800**	0	–500	125	6,5	7
800	**1 000**	0	–560	140	7	8
1 000	**1 250**	0	–660	165	7	8
1 250	**1 600**	0	–780	195	7	8

The housing bore

The requisite interference fit, the correct static sealing and proper seal installation will be assured if the housing bore meets the demands outlined below. The following recommendations apply to housings of steel or cast iron.

Tolerances
The bore in the housing (diameter d_2) should be machined to tolerance H8 (➔ **Table 4**). The tolerances for the outside diameter of the seal of steel or elastomer are included to enable the probable interference between housing bore and seal outside diameter to be calculated.

Surface finish
It is recommended that the surface roughness to ISO 4288 of the housing bore should be kept within the following limts. For seals with rubber or Bore-Tite coated steel outside diameters:

R_a 1,6 ... 6,3 µm
R_z 10 ... 25 µm
R_{max} 25 µm

and for seals with steel outside diameter without coating:

R_a 0,8 ... 3,2 µm
R_z 6,3 ... 10 µm
R_{max} 10 µm

Lead-in
In order for the seal not to be damaged when it is being installed, the leading or entering edge of the bore should be made according to the illustration above.

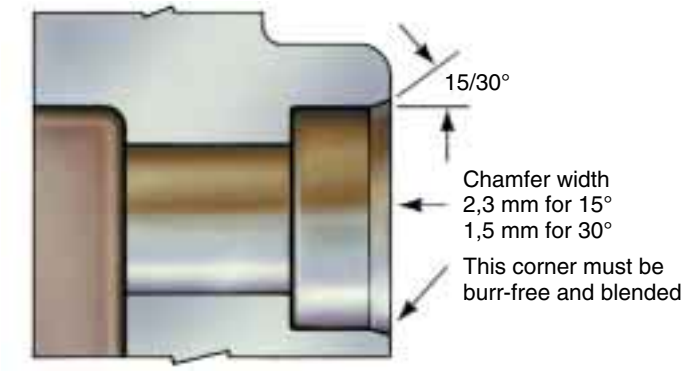

Bore-Tite coating
CR applies a coating of Bore-Tite to the outside diameter of selected seals with steel shells as standard. Bore-Tite is a water-based polyacrylate sealant which is green in colour. It is non-hardening and fills slight irregularities in the housing bore. In most cases the elastic Bore-Tite coating provides an adequate static seal between the seal outside diameter and the housing bore.

Bore-Tite is resistant to most oils, greases, aqueous acids, alkalis, salts, alcohols and glycols. It is not compatible with aromatics, ketones or esters.

Table 4

Housing bore/seal outside diameter Nominal over	incl.	**Bore diameter deviation** (Tolerance H8) high	low	**Seal outside diameter tolerances Steel** high	low	**Rubber** high	low
mm		µm		µm		µm	
	18	+27	0	+200	+80	+300	+150
18	**30**	+33	0	+200	+80	+300	+150
30	**50**	+39	0	+200	+80	+300	+150
50	**80**	+46	0	+230	+90	+350	+200
80	**120**	+54	0	+250	+100	+350	+200
120	**180**	+63	0	+280	+120	+450	+250
180	**250**	+72	0	+350	+150	+450	+250
250	**300**	+81	0	+350	+150	+450	+250
300	**315**	+81	0	+450	+200	+550	+300
315	**400**	+89	0	+450	+200	+550	+300
400	**500**	+97	0	+450	+200	+550	+300
500	**630**	+110	0	+500	+220	–	–
630	**800**	+125	0	+500	+240	–	–
800	**1 000**	+145	0	+550	+250	–	–
1 000	**1 250**	+165	0	+600	+270	–	–
1 250	**1 600**	+195	0	+650	+300	–	–

Housing bore and seal outside diameter tolerances

Seal selection

CR seals are intended to seal the interface between a rotating and a non-rotating machine component or between components in relative motion. Their purpose is to

– retain lubricant,
– exclude contaminants,
– separate fluids or gases, and
– withstand differential pressures.

They should also perform efficiently with a minimum of friction and wear in critical applications and where operating conditions are unfavourable.

To meet the requirements, CR seals are produced in many designs and different materials. Each different execution, because of its design and material, exhibits special properties which make it particularly suitable for a given application.

Many factors influence the choice of seal. As well as the operating conditions, these include

– type of lubrication,
– circumferential speed of the sealing lip, and
– coaxiality deviations and runout,

the choice is also affected by the environmental conditions and how they affect the seal from chemical, mechanical and thermal points of view.

The available space, efficiency requirements and last but not least economic considerations must all be taken into account when selecting a seal. Depending on the application, one or more of the influencing factors will dominate. Therefore, it is not possible to establish general rules for seal selection. The following recommendations are intended to highlight the properties of the various seal designs and to facilitate selection.

The matrix provides an overview of the seals, their design characteristics

This matrix can only provide a rough guide and the final seal selection should only be made after a more detailed examination of sealing properties with respect to the actual operating conditions and environment. If several seal designs and materials are shown together then the ratings apply to the specified design/material.

Signs and symbols

+ + +	Very well suited	(very good)	D	Duralip (special nitrile rubber)
+ +	Well suited	(good)	P	Polyacrylate elastomer
+	Suitable	(normal)	R	Nitrile rubber
–	Less suitable	(satisfactory)	V	Fluoro rubber
– –	Unsuitable	(poor)	■	Special design/execution to order
			( )	Option

CR Seals: design and properties

Seal types		Design: Shell (outside diameter) Steel	Design: Shell (outside diameter) Elastomer	Design: Sealing lip (primary) Design	Design: Sealing lip (primary) Material	Design: Secondary lip (a = rubbing, b = non-rubbing)
Radial shaft seals	CRS1, CRSH1			normal	R, V	
	CRSA1, CRSHA1, HMSA27	HMSA27 Bore-Tite		normal	R,V	a: CRS(H)A b: HMSA27
	CRW1, CRWH1	Bore-Tite		Wave-seal	R, V (P)	
	CRWA1, CRWHA1	Bore-Tite		Wave-seal	R, V (P)	b
	HDS1, 2, HDS3			normal	R, D, V	
	HDSA1,2			normal	R, D, V	a
	HMS1			normal	R	
	HMSA1, 2, 3			normal	R	a
	HMS4		R, V (P)	normal	R, V (P)	
	HMSA7		R, V (P)	normal	R, V (P)	a
	HS5		R, D, V one-piece	normal	R, D, V	
	HS6, 7, 8		R, D (V) split	normal	R, D (V)	
Mechanical seals HDDF		R		Steel		
V-ring seals VR		R (V)		R (V)		
Axial clamp seals CT		R		R		

Suitability

Seating conditions					Pressure differential		Operating conditions						Media				
Tight fit	Rough surface	Thermal expansion	Split housing bore	Ease of installation	Housing bore/ outside diameter	Sealing lip/ counterface	Sliding speeds ≤ 14 m/s	Sliding speeds > 14 m/s	Temperatures ≤ 100 °C	Temperatures > 100 °C	Runout	Coaxiality deviation	Grease	Oil	Moderate particulate contamination	Heavy particulate contamination	Media
+++ CRSH	–	–	– –	+	+	–	+	–	+	V	+	+	+	++	+	–	V
+++ CRSH	–	–	– –	+	+	–	+	–	+	V	+	+	+	++	++	+	V
+++ CRWHA	+	–	– –	+	++	+++ CRW5	++	+	+	V	+	+	++	+++	+	–	■
+++ CRWHA	+	–	– –	+	++	+++ CRWA5	++	+	+	V	+	+	++	+++	++	+	V
+++	–	–	– –	+	+	++	++	+	+	V	++	++	+	++	+	D	V
+++	–	–	– –	+	+	++	++	+	+	V	++	++	+	++	+++	D	V
++	–	–	– –	+	+	–	+	–	+	– –	+	+	+	++	–	–	– –
++	–	–	– –	+	+	–	+	–	+	– –	+	+	+	++	+	+	– –
+	++	++	+	+	++	–	+	–	+	V	+	+	+	++	+	+	– –
+	++	++	+	+	++	–	+	–	+	V	+	+	+	++	++	+	V
– –	++	++	+	++	++	–	–	– –	+	V	++	++	+	+	+	D	V
– –	++	++	+	+++		– –	–	– –	+	V	++	++	++	+	+	D	V
+	++	++	+	++	+++	++	– –	– –	+	– –	– –	– –	–	+++	+++	+++	– –
	+++	+++	+	+++		–	–	–	+	V	+++	+++	++	+	++	+	V
	++	+++	+	+++			+	+	+	– –	+++	+++	– –	– –	++	+	– –

and their suitability for different application conditions.

A more detailed presentation of the seals and their properties as well as the available range will be found in the catalogue ”CR seals”. The matrix can only provide a rather rough classification of the seal designs as differentiation is limited by the number of symbols used.

Grease retention

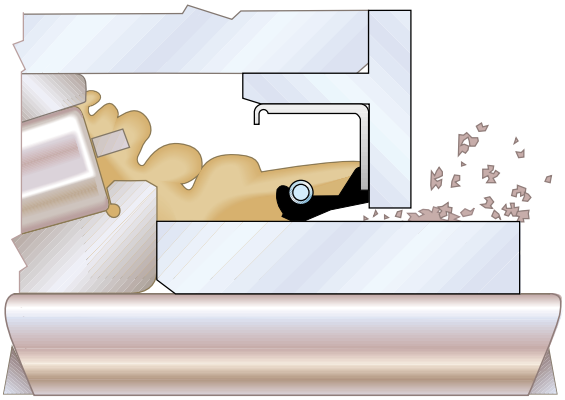

Greases are generally easy to retain in a bearing arrangement because of their relatively high consistency. This, therefore, places comparatively small demands on the seal and most types of seal can be used.

Radial shaft seals without garter spring, e.g. the CR HM design, are very suitable where circumferential speeds are low. They should be installed with their lip facing the grease, i.e. for bearing arrangements, the lip should point inwards.

However, spring-loaded radial shaft seals are equally suitable for grease retention. If frequent relubrication is required, it is recommended that at least one of the seals is mounted with its lip facing outwards. This enables excess grease to escape past the sealing lip, thus preventing a build-up of grease and the consequent generation of heat. In cases where it cannot be guaranteed that grease will be supplied to the sealing lip, it is recommended that a seal with secondary lip is used and the space between the two lips filled with grease. Because of the unfavourable cooling conditions associated with grease lubrication, the permissible speeds are only approximately half those for the same seal, when it is used for oil retention.

In addition to radial shaft seals, without or with garter spring, V-ring seals and felt seals are also appropriate for grease lubrication.

Oil retention



Lubricating oils, particularly those with low viscosity, are more difficult to retain in a bearing arrangement than greases. Therefore, radial shaft seals with garter spring are used almost exclusively, e.g. CR seals of the CRW1 or HMS4 designs.

Where operating conditions are rough, contamination heavy and circumferential speeds relatively low, mechanical seals of the HDDF design are particularly suitable.

In normal cases, CRW1 seals with a hydrodynamically formed Waveseal lip are adequate. This lip has a sinusoidally formed sealing edge which has an axial pumping action inwards as well as outwards, irrespective of the direction of shaft (or housing) rotation. When the sealing position should also be protected against dust or other fine solid contaminants, the use of a radial shaft seal with secondary (dust) lip, e.g. of the CRWA1 design, is recommended.

V-ring seals can also be used to retain oil. They should be arranged on the oil side and be axially supported on the shaft.

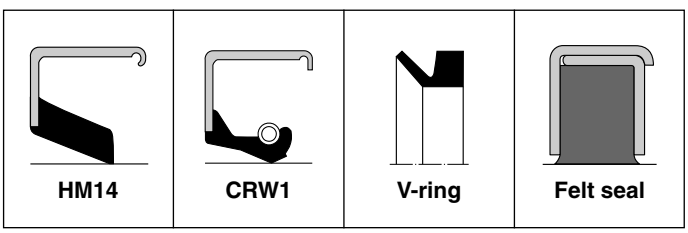

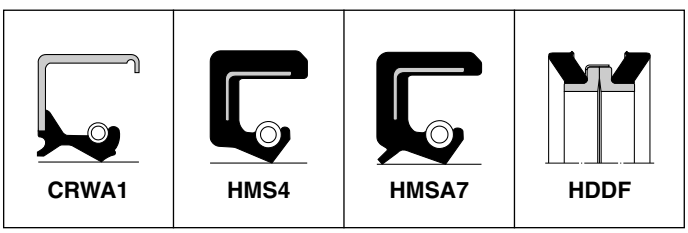

Exclusion



V-ring seals are excellent for keeping contaminants out. They rotate with the shaft, act as flingers, and seal against a counterface at right angles to the shaft.

When radial shaft seals are used primarily to exclude contaminants, the sealing lip should face outwards. Where circumferential speeds are low and operating conditions normal, virtually all types of radial shaft seal can be used.

Where operating conditions are unfavourable or arduous, the use of Waveseal designs with hydrodynamic sealing aids is recommended, e.g. of the CRW or heavy-duty HDS designs. To reinforce the sealing effect, two seals can be mounted in tandem or a double lip seal with the lips arranged in tandem can be used.

Alternatively, a V-ring seal or CT axial clamp seal can be mounted outside the radial shaft seal. This prevents coarse contaminants from penetrating to the sealing lip of the radial shaft seal. The sealing lip of the V-ring or axial clamp seal can run against the face of the housing or against the back face of the radial shaft seal.

Exclusion/retention

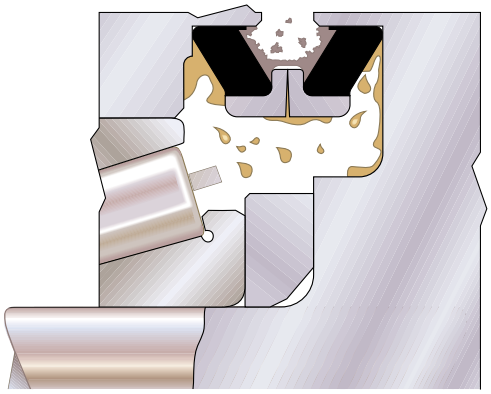

Contaminant exclusion and lubricant retention are often equally important. In many cases the use of a radial shaft seal of the CRWA design which has a secondary (dust) lip will provide adequate protection.

Another way of solving the problem is to use two seals with their lips pointing in opposite directions, e.g. two CRW or two HDS seals.

Highly efficient, double direction seals can be obtained using two opposing V-rings with an intermediate machined thrust washer as the counterface for both seals.

For extremely difficult environmental conditions it is preferable to use CR mechanical seals of the HDDF design, provided the sliding speed of the sealing surfaces is within the permissible range.

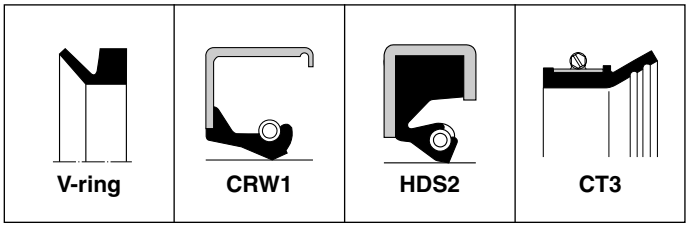

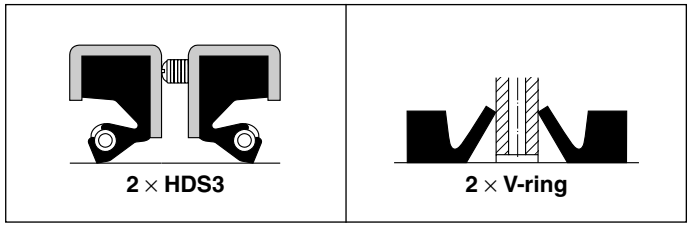

Separating two liquids



In cases where it is necessary to separate two liquids from each other, two different solutions are available, the choice being governed essentially by the space available and by the required sealing efficiency.

The first solution is to use two radial shaft seals with their lips pointing in opposite directions (back-to-back).

The second is to use radial shaft seals of the HDSD or D designs which also have their two lips pointing in different directions.

Radial shaft seals used for the separation of two liquids must always have spring-loaded lips. Where there is a risk that one or both sealing lips can run dry, it is recommended that the space between the two lips is filled with a rolling bearing grease which will then provide an adequate lubricant film.

Containing high pressure

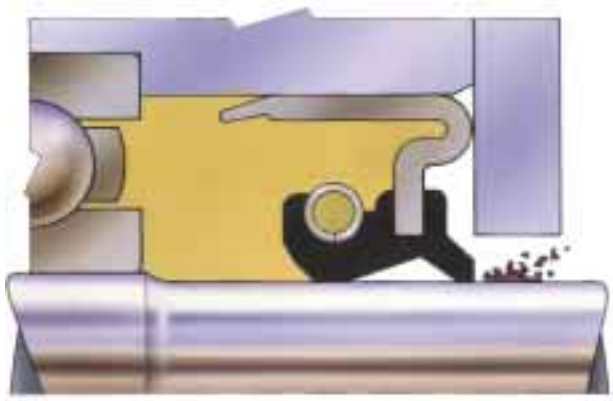

Special radial shaft seals are usually required if there is a considerable differential pressure across the seal. Standard seals can normally only withstand differential pressures of 0,07 MPa maximum, and only at relatively low circumferential speeds.

CR radial shaft seals of the CRWA5 and CRW5 designs are able to withstand pressure differentials of up to 0,63 MPa at circumferential speeds of up to 5 m/s.

When a seal is under pressure, the sealing lip will be pressed harder against the counterface so that friction and temperature will increase in the contact. If speeds are high, this will lead to accelerated wear which will considerably shorten the life of both seal and counterface. It is therefore necessary to balance pressure and circumferential speed against each other in such applications.

Occasional pressure differentials may make the use of a second seal necessary. A radial shaft seal can be used with its lip directed towards the higher pressure, or a V-ring, with its lip pointing towards the low pressure side is also suitable.

Where differential pressures exist, it is necessary to provide some form of axial retention for the seal at the low pressure side to prevent it from being pressed out of the housing bore. Where standard seals are used, it is also advisable to provide support for the sealing lip so that the force on it produced by the excess pressure will be reduced.

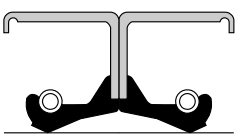

2 × CRW1

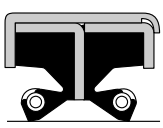

HDSD2

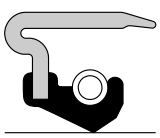

CRW5

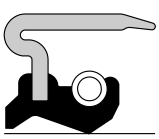

CRWA5



HDW1



HDS3

Restricted space

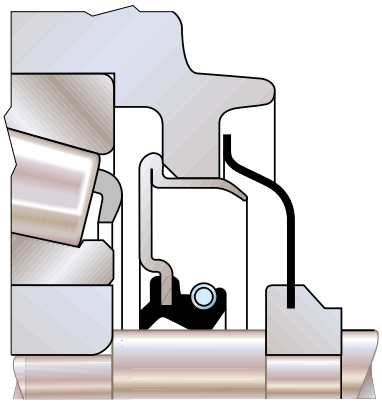

Often the available space is insufficient for a standard radial shaft seal. A special seal design with narrow shell or low cross section is required, or a V-ring seal can be fitted outside the seal cavity.

Where radial and axial space are limited and large-diameter shafts are involved, radial shaft seals of the HS design can be used.

For cases where a V-ring can be used, an economic sealing arrangement will be achieved; the V-ring seals are very simple to install. The V-ring seals axially, exerting a light pressure on the counterface, which may be a stationary, or even rotating, machine component.

Installation restrictions



Where it is difficult, or even impossible, to install a seal either during assembly or maintenance, by passing it over the end of a shaft, V-ring seals, or split radial shaft seals of the HS6, HS7 and HS8 designs may be the solution.

These are all-rubber seals without any reinforcement and are easy to install. Once on the shaft they are held together by the garter spring which is joined by a control wire or threaded connector, or by a hook and eye. They should be axially secured in the housing bore by a cover plate, which may be either split or in one piece.

Split HS seals, depending on their design, are suitable for circumferential speeds of up to 7,5 to 10 m/s. They are available for shaft diameters from 170 to 4 500 mm (approximately).

The V-ring seals are elastic and can be stretched. They may therefore be mounted by stretching over other components. If, however, the exchange of a V-ring seal entails the time-consuming dismounting of various components it is strongly advisable – where the particular bearing arrangement permits – to mount one or two spare seals on the shaft during the initial assembly. In this way the worn V-ring can easily be removed by cutting and the replacement ring quickly and simply located in the desired position.



HMS1



HS5



HS8

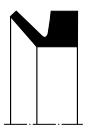

V-ring



CRWH1



HDS3



V-rings

Seal installation

No matter how well constructed a seal is, or how well suited it is for an application, incorrect installation will prevent it from performing properly. In fact, improper installation resulting from lack of knowledge or care (including cleanliness) is the most common cause of premature seal failure.

Since radial shaft seals should have an interference fit in the housing bore, the use of a mechanical or hydraulic press with suitable accessories is recommended when mounting. It is very important that the pressure is applied evenly around the whole circumference of the seal and preferably as close as possible to the outside diameter. If a suitable press is not available a soft-faced mallet and bearing cup or mounting dolly can be used. Blows to the seal itself should be avoided, so as not to damage the sealing lip. It is also possible to use a wooden block and hammer to drive the seal home.

Guidelines for proper installation

- ❏ Check that the dimensions of the selected seal match those of shaft and bore.
- ❏ Check the new seal for any damage (dents, scores or cuts). Never use damaged seals. Carefully clean the seal if it has become dirty.
- ❏ Chamfer and blend the housing bore corner to prevent damage to the outside surface of the seal.
- ❏ Check to see that the counterface on the shaft is undamaged (no bruises, scratches, cracks, rust or raised areas).
- ❏ All shaft edges over which the seal has to be passed must be chamfered or rounded.
- ❏ Lightly grease or oil the seal before installation.
- ❏ After installation, check to see that other machine components or shaft shoulders do not rub against the seal.

After installation
Once radial shaft seals have been installed, care should be taken to see that they do not become contaminated, e.g. with paint, if the equipment is to be painted. This also applies to the counterface area on the shaft. The seals can be protected during painting by cardboard discs, for example. Any housing vents should also be masked so that they do not become clogged. After painting has been completed, all the masking material must be removed before operating the equipment.

If painted or lacquered equipment is to be baked or unpainted equipment is to be heated for any reason, care should be taken not to apply direct heat to the seals and to ensure that they are not heated to a higher temperature than the maximum permissible for the material.

If seals have to be cleaned, e.g. for inspection, warm soapy water (not above 30 °C) can be used, and the seals should be allowed to dry at room temperature. Solvents such as trichloroethylene, carbon tetrachloride or hydrocarbons should be avoided. Sharp-edged objects, wire brushes, emery cloth, sand paper etc. should not be used.

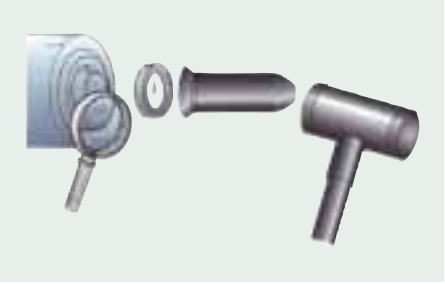

Before installing the seal, check that housing bore and shaft are clean and apply lubricant to seal.

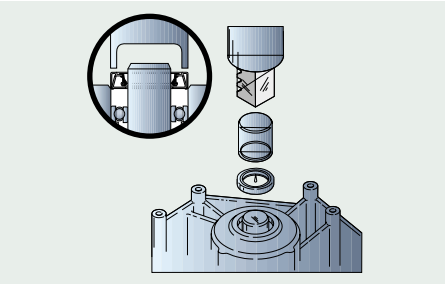

As the seal outside diameter is slightly larger than the housing bore, the use of a press and mounting tool is recommended, so that the force can be applied evenly around the seal and that the seal will be properly seated in the bore.

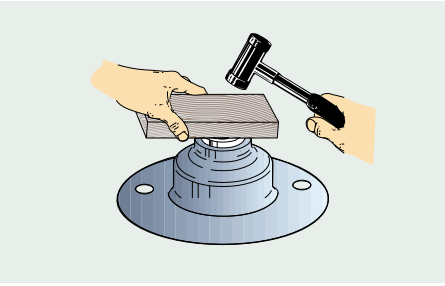

If no suitable tools are available, a wooden block and hammer can be used. To avoid skewing of the seal the blows should be applied centrally.

Repairing worn shafts

When replacing seals, the counterface area on the shaft should always be checked for wear and other damage. Excessive water, heavy contamination, high temperatures, inadequate seal lip lubrication and high speeds can all cause the seal lip to wear a groove in the counterface. Once this has happened, simply installing a new seal will not prevent leakage, and the shaft must be repaired. This may involve costly reworking of the shaft which normally means dismantling the equipment and attendant downtime. CR Speedi-Sleeves have been designed to provide a fresh counterface surface in minutes. They are simply pushed over the damaged counterface making the shaft as good as new at a minimum cost.

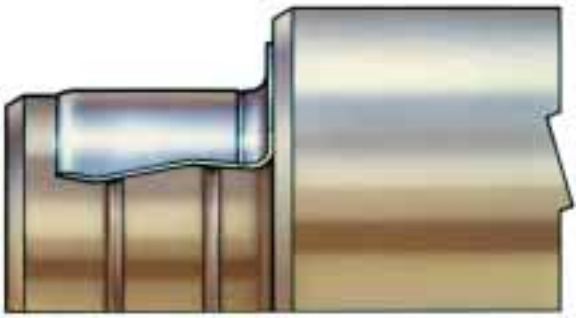

Speedi-Sleeves

These shaft repair sleeves are extremely thin-walled and enable the original seal size to be used. It is not necessary to keep extra seal sizes in stock or to make special records. The standard Speedi-Sleeve range is for shaft sizes of 12 to 200 mm diameter. All sizes have a wall thickness of 0,254 mm. The sleeves are made of high quality stainless steel and have a hardness of 95 HRB. The surface finish lies between R_a = 0,25 and 0,5 µm and is without machine lead (directionality). In many cases they provide a better counterface for the sealing lip than the original shaft seating. Normally, the Speedi-Sleeve can be mounted directly on the cleaned shaft, but if the surface is scored or otherwise damaged, it may be beneficial to apply an epoxy filler just before the Speedi-Sleeve is installed.

To determine which size of Speedi-Sleeve to use, the shaft should be carefully cleaned and the diameter measured in three planes at 120° at an undamaged position. The arithmetical mean of these measurements is used to select a suitable size of sleeve. Provided the mean value is within the diameter range of the sleeve, it will have a sufficient interference fit on the shaft and will not wander. No adhesive is required.

LDSLV repair sleeves

For larger shafts (from approximately 200 to approximately 1 250 mm diameter) LDSLV repair sleeves are available. These are made of high-strength, hot-rolled steel, are surface treated, and have a hardness of 96 HRB. The wall thickness is 2,4 mm. The outside contact surface for the seal is fine machined and chromium plated to enhance its wear and corrosion resistance.

There are two alternative ways of employing LDSLV repair sleeves. Either an appropriate sleeve is mounted on the shaft over the damaged counterface, and a seal which has a 4,8 mm larger bore than the original used as the replacement, or the shaft can be machined down by 4,8 mm. In this latter case the original size of seal can be used as the replacement.



Use the average of three shaft diameter measurements taken in planes at 120° when selecting sleeve size



Place flanged end of Speedi-Sleeve on to shaft first



Gently apply the installation tool (supplied with sleeve) over the sleeve until it abuts the flange.



Gently tap the centre of the installation tool using a soft-faced hammer or mallet until the sleeve reaches its correct position.



When the sleeve has been correctly positioned, the flange can be removed if desired.

Seal maintenance

When to inspect and replace
Unlike bearing life, seal life cannot be calculated. The purpose of seals is to contain lubricants and exclude contaminants, and their role is sacrificial when they are used to protect bearings, i.e. they are used to help the bearing achieve its required life. As seal failure is almost entirely governed by environmental conditions, the only "life formula" which can be applied to seals is experience.

As the environment plays such a dominant part in determining seal life, and as the amount of contamination the seal encounters influences its usefulness, it may be expected that a seal operating in a dirty, dusty environment, or one subjected to routine wash-downs will not last nearly as long as a seal used in a clean, dry environment.

Machine operating cycles, shaft speeds and operating temperatures all influence maintenance and replacement intervals. One thing is certain, however, and that is that seals are the components of a bearing arrangement which keep lubricant in the arrangement and keep it clean so that long bearing life can be realised.

Seal replacement should not automatically entail simply replacing the seal with a new one of exactly the same design. If it is found that the oil has become dirty, for example, it may be worthwhile upgrading the whole sealing arrangement. A tougher, more chemically resistant material may be called for, or additional sealing elements may be required to ward off contaminants.

Generally speaking, a seal should be replaced just as soon as the first signs of wear or leakage are discovered.

There are other causes of premature seal failure besides contamination.

Improper installation
A common cause of early failure arises during installation. The seal may be allowed to get dirty, the lip is not properly lubricated at the start, correct tools are not used, or the seal is not properly seated in its housing. These problems can be rectified through proper training in mounting procedures.

Change of lubricant
Frequently, new lubricants with additive packages are introduced with a view to extending service intervals for machinery and equipment. However, many of these additives can produce negative reactions in the sealing materials. If rapid seal failures suddenly start to occur where none has been experienced before, the cause may be a changeover to an "improved" lubricant.

Wrong replacement seal
A simple error in taking the wrong part number or designation can result in sudden "mysterious" seal failure, e.g. a nitrile rubber seal might be installed instead of a much more resistant fluoro rubber seal, although the design is otherwise identical.

Wrong seal choice
The choice of a seal which is unsuitable for the particular application is also a cause of premature seal failure. A systematic investigation of such seal failures by an expert will soon expose the cause. If adequate experience is not available in-house it is advisable to either conduct trials or to contact SKF for assistance with the selection.

Seal check list

- ❏ The seal should be properly stored in a cool, dust-free, moderately ventilated room, preferably at temperatures of between +15 and +25 °C and a relative humidity below 65 %.
- ❏ The original packaging should be intact and the seal should be kept lying down in the original packaging until immediately before use. Seals should never be hung from pegs or nails.
- ❏ The correct installation tools should be available.
- ❏ The work area should be clean and protected against dirt from the environment.
- ❏ The chosen seal should be checked to see that its maximum permissible circumferential speed will not be exceeded.
- ❏ The chosen seal should be checked to see that it can withstand the media involved.
- ❏ The chosen seal should be checked to see that it is suitable for the operating temperature.
- ❏ The lubricant to be used (including additives) must be compatible with the seal material.
- ❏ The counterface region of the shaft should have a hardness appropriate to the application, but at least 35 HRC.
- ❏ The counterface should be machined to tolerance h11 and have a form tolerance to IT8.
- ❏ The surface should have a roughness R_a of 0,25 to 0,5 µm and be without machine lead.
- ❏ The shaft end and any edges over which the seal must pass, should be chamfered or rounded.
- ❏ The housing bore should be machined to tolerance H8.
- ❏ The housing bore should have a lead-in of up to 30° to facilitate mounting.
- ❏ The deviation from coaxiality should be within the permissible limits (e.g. max. 0,25 mm for a shaft diameter of 75 mm).
- ❏ The runout should be within the permissible limits (e.g. max. 0,25 mm for a shaft diameter of 75 mm).
- ❏ Whenever possible, the equipment should be vented to minimise the pressure differential across the seal.

By checking the points listed and following the advice, the service life of the seal, and of any bearing it protects, will be maximised. For additional information on the selection and use of seals, please contact SKF.



A brief history of CR Industries

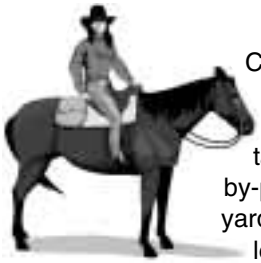

CR Industries was founded in America in 1878 as Chicago Rawhide. The company cured or tanned hides, which were natural by-products of the busy Chicago stockyards, and turned them into rawhide leather belting. These were the belts that literally drove the industrial development of the American Midwest.

In the early 1900s CR worked closely with Henry Ford and other automotive pioneers to produce leather products for early automobiles. In 1928, the company patented the first self-contained shaft seal, initially designed for use in automobile wheel hubs.

In the mid-1930s, CR pioneered the development of custom formulating, compounding and moulding of elastomers (synthetic rubber) to develop higher performance sealing materials. This produced other innovations in manufacturing processes, new sealing techniques and expanded industrial applications.

Today, CR is the world's leading supplier of fluid sealing devices for the truck, automotive, agricultural machinery and machine tool industries. CR also produces seals for aerospace applications, earth moving equipment, household appliances and a wide variety of pumps, hydraulic systems, motors and sub-assemblies.

The CR range comprises more than 200 types of seal, over 3 000 stock sizes and over 10 000 variants for the shaft diameter range of 3 to 4 500 mm. CR has an ongoing programme of work to improve the performance and reliability of their products. New sealing units, for example, for the automotive industry, and the development of new materials and processes will further expand the range of applications.

CR has received quality manufacturing awards from more than 200 companies. The company has been part of the SKF Group since 1990.



The SKF Group – a worldwide corporation

SKF is an international industrial Group operating in some 130 countries and is world leader in bearings.

The company was founded in 1907 following the invention of the self-aligning ball bearing by Sven Wingquist and, after only a few years, SKF began to expand all over the world.

Today, SKF has some 42 000 employees and more than 80 manufacturing facilities spread throughout the world. An international sales network includes a large number of sales companies and over 7 000 distributors and retailers. Worldwide availability of SKF products is supported by a comprehensive technical advisory service.

The key to success has been a consistent emphasis on maintaining the highest quality of its products and services. Continuous investment in research and development has also played a vital role, resulting in many examples of epoch-making innovations.

The business of the Group consists of bearings, seals, special steel and a comprehensive range of other high-tech industrial components. The experience gained in these various fields provides SKF with the essential knowledge and expertise required in order to provide the customers with the most advanced engineering products and efficient service.





The SKF house colours are blue and red, but the thinking is green. The latest example is the new factory in Malaysia, where the bearing component cleaning process conforms to the strictest ecological standards. Instead of trichloroethylene, a water-based cleaning fluid is used in a closed system. The cleaning fluid is recycled in the factory's own treatment plant.



The SKF Engineering & Research Centre is situated just outside Utrecht in The Netherlands. In an area of 17 000 square metres (185 000 sq.ft) some 150 scientists, engineers and support staff are engaged in the further improvement of bearing performance. They are developing technologies aimed at achieving better materials, better designs, better lubricants and better seals – together leading to an even better understanding of the operation of a bearing in its application. This is also where the SKF New Life Theory was evolved, enabling the design of bearings which are even more compact and offer even longer operational life.



SKF has developed the Channel concept in factories all over the world. This drastically reduces the lead time from raw material to end product as well as work in progress and finished goods in stock. The concept enables faster and smoother information flow, eliminates bottlenecks and bypasses unnecessary steps in production. The Channel team members have the knowledge and commitment needed to share the responsibility for fulfilling objectives in areas such as quality, delivery time, production flow etc.



SKF manufactures ball bearings, roller bearings and plain bearings. The smallest are just a few millimetres (a fraction of an inch) in diameter, the largest several metres. In order to protect the bearings effectively against the ingress of contamination and the escape of lubricant, SKF also manufactures oil and bearing seals. SKF's subsidiaries CR Industries and RFT S.p.A. are among the world's largest producers of seals.

© Copyright SKF 1995
Publication **4293/I E**
Reg. 751 · 8 000 · 1995-03